Lexical entailment

Some foundations

What is hyponymy?

- A structuring relation of vocabulary
  - For instance fruit <-> apple
    - Apple: hyponym of fruit
    - Fruit: superordinate (hyperonym) of apple

Hyponymy – two Difficulties

- Hyponymy often defined as entailment between sentences
- BUT
  - Does not invariably entail the corresponding sentence with the hyperonym
  - I.e.:

‚It's not a tulip.' ≠ ‚It's not a flower'

‚That it was a tulip surprised her.' ‚That it was a flower surprised her.'

Entailment ≠ hyponymy

- Entailments:
  - Need to be context independent
    - i.e. „Not all dogs are pets.“ but in everyday life „Dogs are pets.“

- Hyponymy:
  - Context sensitive

Hyponymy in speech

‚X is a type / kind / sort of Y‘

- A horse is a type of animal.

- * A kitty is a sort of cat.
- > A kitty is a young cat

Hyponymy, a transitive relation?

, If A is a hyponym of B,

and B is a hyponym of C,

then A is C‘

Hyponymy, a transitive relation? – Examples

A car-seat is a type of seat.

A seat is a type of furniture.

---

* A car-seat is a type of furniture.

Hypernymy Detection

Why hypernymy?

Which actors are in involved in scientology?

Another example

- The bow lute, such as the Bambara ndang, is plucked and has an individual curved neck for each string.

  NP0 such as {NP1, NP2, …, (and|or)} NPn

- Approach to pattern-based interpretation techniques

How to find constructions

- Occur frequently and in many text genres
- Almost always indicate the relation of interest
- Can be recognized with little or no pre-enconded knowledge

Vered Shwartz, Yoav Goldberg, Ido Dagan

–

Improving Hypernymy Detection

Determining hypernymy

- Automated methods to determine for given term-pairs (x,y)
  - Is y an hypernym of x?

- Two approaches
  - Distributional
  - Path-based

Distributional method

- Distributional representation of the term-pair
- Decision based on separate context of x and y
- No requirement of occuring together

- Less precise detecting specific semantic similarity between the terms

Path-based method

- Deciding on lexico-syntactic paths/patterns connecting the joint occurences of x and y
  - i.e. Y such as X
- Individual paths as features result in huge, sparse feature space
  - Some patterns are rare
    - „spelt is a species of wheat“
      - X be species of Y
    - „Fantasy is a genre of fiction“
      - X be genre of Y
    - Both indicate X is-a Y

HypeNET

- Integration of a path-based and distributional method
- Uses a long short-term memory (LSTM) network (neural network) to encode dependency paths
  - Training data constructed on knowledge resources used by other models
    - for comparing reason

LSTM-based Hypernymy Detection

HypeNETs Path-based Network – Edge Representation

- Represent each dependency path as a sequence of edges that lead from x to y in the dependency tree
- Each edge contains
  - The lemma
  - POS tag
  - Dependency label
  - Edge direction

$$\vec{v_e} = [\vec{v_l}, \vec{v_{pos}}, \vec{v_{dep}}, \vec{v_{dir}}]$$

HypeNETs Path-based Network – Path Representation

- Path p composed of
  - Edges e1, … ek
  - Edge vectors $\vec{v_{e_1}}, \ldots, \vec{v_{e_k}}$

- Fed in order to an LSTM encoder
  - Resulting in a vector $\vec{o_p}$

- LSTM
  - Effective at capturing temporal pattern in sequences

Term-Pair Classification

- Each (x,y) term-pair is represented by
  - Multiset of lexico-syntactic paths
  - Representation of each (x,y) term-pair as a weighted-average of its path vectors

$$\vec{v_{xy}} = \vec{v}_{paths(x,y)} = \frac{\sum_{p \in paths(x,y)} f_{p,(x,y)} \cdot \vec{o_p}}{\sum_{p \in paths(x,y)} f_{p,(x,y)}} \quad (1)$$

    - fp(x,y): frequency of p in paths(x,y)
  - Path vector fed to a single-layer network (binary classifcation)

$$c = softmax(W \cdot \vec{v_{xy}}) \quad (2)$$

Term-Pair Classification

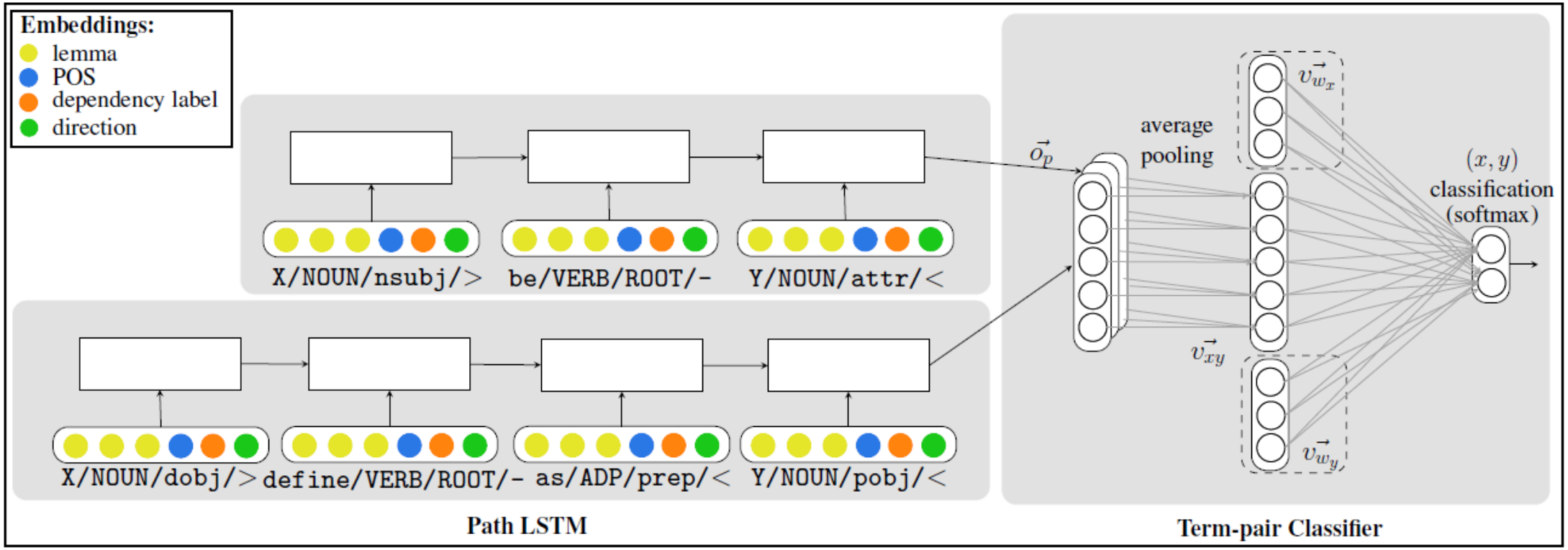

Implementation details

- Train the network with PyCNN (a neural network libary)
- Miminize cross entropy with gradient-based optimization
  - Mini-batches of size of 10
  - Adam update rule
- Initializated the lemma embeddings with
  - Pre-trained GloVe word embeddings (trained on Wikipedia)
  - Tried 50- and 100-dimensional embedding vectors
    - Selected the better performing
  - Other embeddings and out-of-vocabulary lemmas randomly initialized

Dataset

Creating Instances

- Need large amounts of data
- Problem:
  - Hypernymy datasets are relatively small
- Solution:
  - Used distant supervision from knowledge resources
    - WordNet
    - Wikidata
    - Yago
  - Prevent including questionable relations
    - Denoting positive examples per hand selected
- Ratio of 1:4 positive to negative pairs

resource	relations
WordNet	instance hypernym, hypernym
DBPedia	type
Wikidata	subclass of, instance of
Yago	subclass of

Random and Lexical Dataset Splits

- Primary dataset
  - Standard random splitting
    - 70% train
    - 25% test
    - 5% validation sets

	train	test	val	all
random split	49,475	17,670	3,534	70,679
lexical split	20,335	6,610	1,350	28,295

- Problem with supervised distributional lexical inference methods
  - Tend to perform „lexical memorization“
    - i.e.

      (dog, animal), (cat, animal), (cow, animal) -> (x, animal) => (paper, animal)

Baseline

Baseline – Path-based method Snow

- Extraxted all shortest paths of four edges or less between terms in a dependency tree
- Add paths with „satellite edges“
  - i.e. such Y as X
- Number of distinct paths was 324,578
  - Apply χ^2 feature selection to keep only 100,00 most informative paths

Baseline – Path-based method Generalizion

- Compared their method to a baseline with generalized dependency paths
  - Replaced edges with their POS tags and wildcards
- Generated the powerset of all possible generalizations

path
X/NOUN/dobj/> establish/VERB/ROOT/- as/ADP/prep/< Y/NOUN/pobj/<
X/NOUN/dobj/> VERB as/ADP/prep/< Y/NOUN/pobj/<
X/NOUN/dobj/> * as/ADP/prep/< Y/NOUN/pobj/<
X/NOUN/dobj/> establish/VERB/ROOT/- ADP Y/NOUN/pobj/<
X/NOUN/dobj/> establish/VERB/ROOT/- * Y/NOUN/pobj/<

- Number of features went up to 2,093,220
  - Kept only 1,000,000

Baseline – distributional methods unsupervised

- SLQS: entropy-based measure for hypernymy detection
- Applied the vanilla setting of SLQS on their dataset
  - Bad result, due to containing rare items
  - Improved later with changed settings and items

- Validation set used for the beginning to tune for
  - the classification of pairs as positive
  - The maximum number of each terms most associated contexts (N)

- SLQS performs better for classifying specificity level of related terms than hypernymy

Baseline – distributional methods supervised

- Represent term-pairs with distributional features with 3 state-of-the-art methods
  - Concatenation
  - Difference
  - Dot-product
- Used several pre-trained embeddings of different sizes
  - Trained on three classifiers
    - Logistic regression
    - SVM
    - SVM with RBF kernel

Results

Results

method		random split			lexical split		
		precision	**recall**	F_1	**precision**	**recall**	F_1
Path-based	Snow	0.843	0.452	0.589	0.760	0.438	0.556
	Snow + Gen	0.852	0.561	0.676	0.759	0.530	0.624
	HypeNET Path-based	0.811	0.716	0.761	0.691	**0.632**	0.660
Distributional	SLQS (Santus et al., 2014)	0.491	0.737	0.589	0.375	0.610	0.464
	Best supervised (concatenation)	0.901	0.637	0.746	0.754	0.551	0.637
Combined	HypeNET Integrated	**0.913**	**0.890**	**0.901**	**0.809**	0.617	**0.700**

Analysis

Qualitative Analysis

- HypeNET finds high-scoring paths of true-positives
  - In the path-based baseline, these are the highest-weighted features
  - LSTM less straight forward at identifying the most indicative paths
    - Success because of considering a certain path p as the only path for an appeared term-pair and compute it as a TRUE label score

$$softmax(W \cdot \vec{v_{xy}})[1], \text{ setting } \vec{v_{xy}} = [\vec{0}, \vec{o_p}, \vec{0}]$$

Qualitative Analysis - Snow

- Snows method can only rely on verbatim paths
  - > limitation of its recall
- Its genaralized version leads to coarse generalization
  - i.e. X VERB Y from
    - X take Y from
  - Avoidance in generalization lead to lower recall
- HypeNET provides a better midpoint
  - Fine-grained generalization by learning additional example paths

Further notice – Random split

- HypeNET learned a range of specific paths
  - i.e. as X is Y for e.g. Y=magazine
  - X is Y produced e.g. Y= film
- HypeNET noticed ‚X is Y‘
  - is a „noisy“ path
    - E.g. (chocolate, problem) for
      „Chocolate is a big problem in the context of children’s health.”

Error Analysis – False positives

- Occured for random splits
  - To sum up sematic relations they used board categories
    - E.g. synonym, includes alias and Wikipedia redirections
- 20% stem from confusing synonymy with hypernymy
  (but are known to be difficult to distinguish)
- 30% were reversed term-pairs, hypernym-hyponym
  - Closer examination revealed pairs of near-synonyms
    - i.e. not clear whether one term more general than the other
      - Fiction in WordNet hypernym of story
      - Fiction in their classification as hyponym
- Some were hypernym-like relations
- Other correspond to rare term-pairs

Error Analysis – False negatives

- Most pairs with few co-occurences in the corpus
  - i.e. (night, play) for „Night“, a dramatic sketch by Harold Pinter
  - Such term-pairs with too few hypernymy-indicating paths

Conclusion

HypeNET

- First, focuse on improving path representation using LSTM
- Next, extend network by intergrating distributional signals

- Architecture seems straightforwardly applicable, could be used for semantic relations

Questions?